Lock and Multipoint Lock Accessories

221.006.002.300
Short-Zamac Adjustable Door Lock Striker (R/L) 250

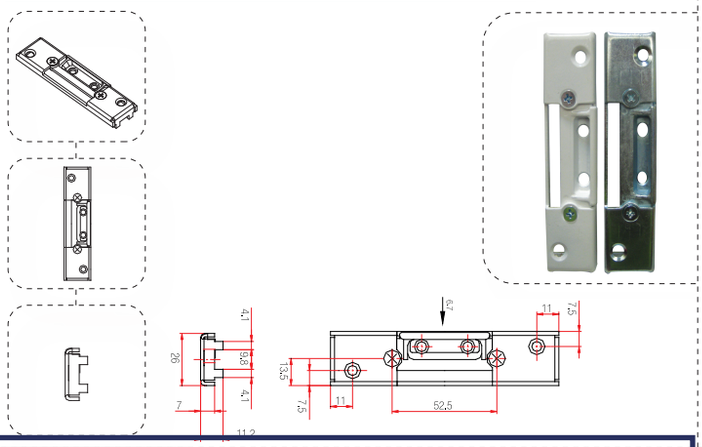

221.006.003.000
Adjustable Door Lock Striker R/L (Ironsheet Thickness:1.5mm) 100

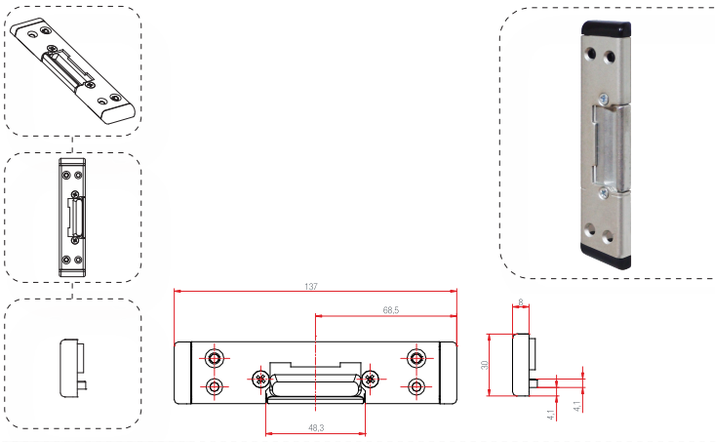

221.006.004.000
Adjustable Door Lock Striker R/L (Ironsheet Thickness :2mm) 100

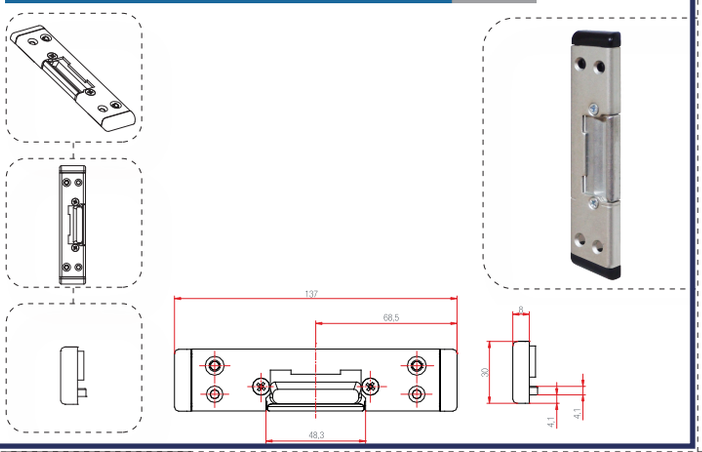

221.007.000.000
Long-IronSheet Adjustable Door Lock Striker 100

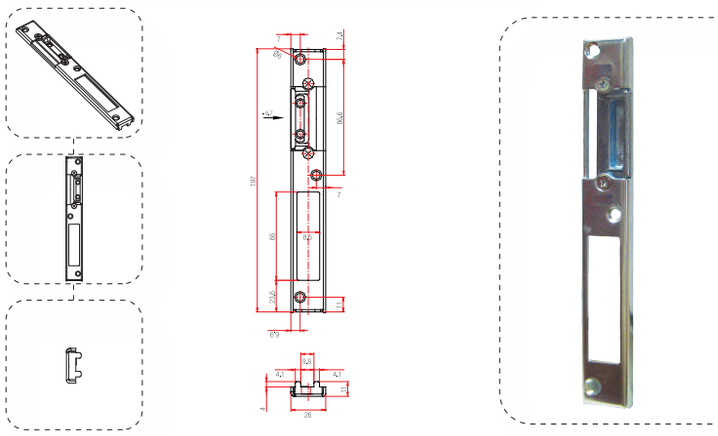

221.007.001.000
Long-Zamac Adjustable Door Lock Striker 100

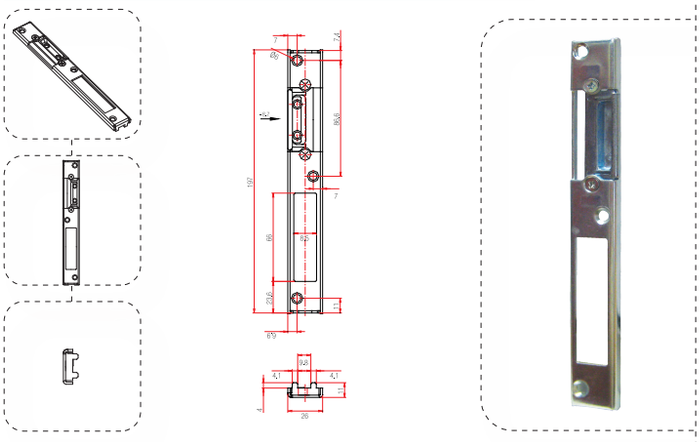
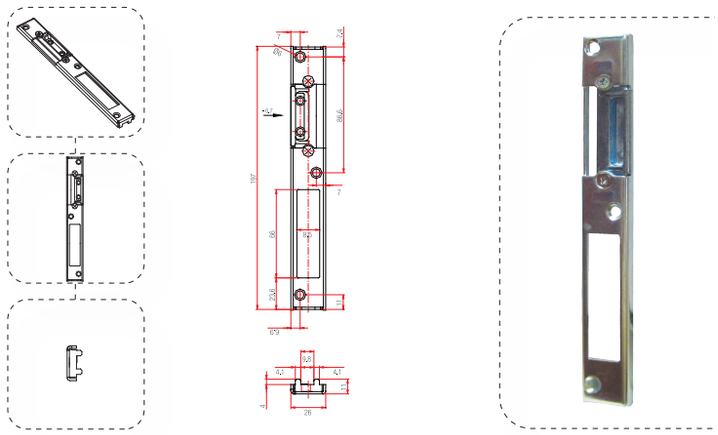
221.007.002.300
Long-Zamac Adjustable Door Lock Striker R/L 100